BLOCK ISLAND UTILITY DISTRICT

The Voltage Conversion project is underway and will start to generate questions from our members. The poles recently set on Corn Neck and Center Road are ten feet taller than our normal poles to provide space necessary for the step transformers and fuses. These poles serve as a visible boundary to where the converted wye system will end on each circuit. These will be relocated in future project phases and eventually removed.

BOARD OF COMMISSIONERS MEETING
JANUARY 27, 2021
4:00 PM

Block Island Utility District
Regular Meeting of Board of Commissioners
Thursday, January 27, 2022 @ 4:00 PM

THIS MEETING WILL BE HELD REMOTELY VIA ZOOM

1. Public Input

2. Review and Discuss Utility-Scale Battery Proposal/RFP/Bid Evaluation with Energy New England

3. Correspondence from Chris Warfel

4. Commissioner's Report

5. Approve Meeting Minutes: December 18, 2021 & December 27, 2021

6. President's Report
    a. National Gird BITS (Cable) Charge Update
    b. Voltage Conversion Update
    c. 2022 Pole Replacement Program Update
    d. Tree Trimming Update
    e. 2021 Audit Update
    f. Staffing Update
    g. Housing Update
    h. EV Charger Update
    i. EV Charging Rate Design Discussion

7. Net Metering (Docket 5192) Update

Join Zoom Meeting
https://us02web.zoom.us/j/2505454073
Meeting ID: 250 545 4073
One tap mobile
13126266799,,2505454073# US (Chicago)
19292056099,,2505454073# US (New York)

Posted: January 25, 2022 at 1:00 PM

AGENDA ITEM 1

PUBLIC INPUT

(THIS PAGE INCLUDED FOR NOTES)

AGENDA ITEM 2

REVIEW AND DISCUSS UTILITY SCALE BATTERY PROPOSAL/RFP/BID EVALUATION WITH ENERGY NEW ENGLAND

AGENDA ITEM 3

CORRESPONDENCE FROM CHRIS WARFEL

, Date: December 27, 2021

To: Jeffrey Wright, Manager, Block Island Power Company; Board, Block Island Power Company/Block Island Utility District; Customers (Shareholders) of the Block Island Power Company/Block Island Utility District

cc: Town Council, Town of New Shoreham, Town Manager, Town of New Shoreham, Conservation Commission, Planning

From: Christopher Warfel.

Re: Agenda Items for Discussion

At the last monthly Board Meeting I said I would write to you to ask for action on a variety of items. I make this request of having the rather unusual perspective of working for an electric utility, being Director of Engineering for an Energy Service Company, Manager of Energy Efficient Construction, an energy efficiency program, and engineer, designer and installer of renewable energy projects over my 35 years of professional work. I believe my requests are reasonable and will improve the future of Block Island Power Company versus the traditional approaches that are not very innovative, and do not take advantage of the technology and broader thinking available to us. Some of the items have been submitted previously. They are included here as they have received no action with any definitive explanation and we would appreciate a clear response.

1) Net Metering Configuration

Attachment A is a BIPCo provided drawing for Net Metering. It is unlike any I have ever seen. In all honesty, I do not understand it, and it is not like schematics the industry is required to develop when undertaking their projects. I am requesting that a full three-line diagram be developed and presented for review. Attachment B is an example of such a diagram. It is a little clunky and could be improved, but it does convey more information.

2) Coordination with Block Island Stakeholders

I am asking the Board to consider approaching other governmental and quasi-governmental organizations to discuss energy utilization and management programs, on-island energy generation, and other similar topics. Each organization should be prepared to make clear their short and long term goals on these topics and what their plans are for implementation. I suspect the Town of New Shoreham has very little in the way of meaningful planning, yet they are a major factor in these areas and needs to get much more involved and informed.

3) Create a Survey

Customer interaction for planning purposes is not very good. Often the meetings are sparsely attended. My belief is that consumers are largely unaware of issues in this field, and often are not comfortable speaking out on an issue that is difficult to understand. Utility issues are a science unto itself and require a lot of effort and experience to understand.

I've discussed creating a survey back in March so you could reach out to your customers and gain an understanding of their interests and concerns. Like many other things, this seems to have evaporated from consideration without explanation. I would suspect that ideas like this don't have the internal resources to see the light of day or that there is no interest. That is the worst part. If you don't agree, go on the record stating your concerns. It sends a very bad message to us when there is zero response, and foments apathy.

4) Review of Energy Efficiency Program

It would be appropriate for an update to be given on the effectiveness of the current energy efficiency program. Who has participated, what are the measures being implemented, how is cost effectiveness be measured, etc. Equally important, is to begin discussions on future similar initiatives. I firmly believe that a load management study should be initiated. We have some conflicting information regarding its effectiveness, specific to the benefit of managing our load shape. We have been told the current power contract does not recognize load management's cost effectiveness, and we have also been told that managing peak makes an energy storage system possibly viable. These are two contradictory positions as I understand it, and it is vital to our planning future to understand the correct reality.

5) Increase the effectiveness of Smart Meter technology

The customers, through Block Island Power, have invested in "Smart Meter" technology. The full capabilities of this technology do not appear to be known and/or well understood. We previously requested permission of BIPCo to work directly with the company that makes the software to understand the technology's capabilities, if the utility was unwilling or unable to allocate the resources to do so. That request was rebuffed, which leaves a lot of issues in the dark.

a) Tangential to this request was an analysis of meters that exported energy with the purpose of identifying solar electric systems working and connected to the BIPCo system. We were made aware of one such system that apparently was put in by the owner with no permits and no interconnection. We brought this information to BIPCo to make them aware of the situation and really do not know where that situation stands, and yes we are an interested party and it is our business. We have attempted to work cooperatively with BIPCo on many issues. As everyone knows, no two people see eye-to-eye all the time, but if the goals are common, consensus normally prevails.
b) Determine how to make the export power register of the Smart Meters visible through SmartHub with written instructions.
c) Require that a manual be available via the BIPCo website that details how to use SmartHub. I challenge the Board to use SmartHub and experiment with extracting data. It has not been easy, and some of this may have to do with the speed of our Internet service.
d) The Board should hold a conference call with the software vendor of SmartHub to discuss these issues with audience participation at a future Board meeting.

This is from NISC's website:

National Information Solutions Cooperative (NISC) is an information technology company that develops and supports software and hardware solutions for our Member-Owners who are primarily utility cooperatives and broadband companies across the nation. NISC is an industry leader providing advanced, integrated IT solutions for consumer and subscriber billing, accounting, engineering & operations, as well as many other leading-edge IT solutions.

At NISC, our focus is service excellence and innovative information technology solutions that enable our Member-Owners to excel in customer service, maximize diversification opportunities, and compete effectively in the changing utility and broadband industries.

NISC is not your typical software vendor. And the difference is you.
As a cooperative we're owned by you—the Members we serve—and commit our whole selves to partnerships with Members that enrich and build upon their connection with their communities.
Our roots stretch back to the mid-1960s, providing a level of stability and history of innovation you won't often find in the software industry. And whether you've been partnering with us for one year or 40, we're committed to your success and will be with you every step of the way.
The NISC Difference may set us apart from other software providers, but connects us to you.

6) Review of RIGL with respect to the definition of Net Metering.

I had previous asked the Board to review the full net metering RI General Law w/r to zero export. I disagreed with management's interpretation codified in the latest minutes. I did not want to pursue this until the Board had reviewed the material as it just would have disintegrated into two people at loggerheads. It is attached. One may think that the point will be moot once the Rate Case is settled, however the Board needs to agree on this as it is a strategic technical issue and needs to be understood. I cannot see how zero export is net metering. The intent is to encourage renewable energy generation, and the project that was caught in this and the Building Official's and the President's unwritten and unadopted policy of coordinating Building Permits with a Net Metering policy that was evolving made it impossible to install that project in a timely manner.

7) Community Solar

Management is more or less against Community Solar, citing the unknown of developers appearing and implementing projects that are counter to the utility's interests. This seems not to be understanding of the concept of Community Solar, and perhaps not understanding prudent strategies to mitigate those concerns (which we (and perhaps the Board) need to understand better).

I spent two years before Planning attempting to update the solar ordinances, and you need to understand that if you want to encourage renewable energy generation, then you need to review the adopted ordinance and work for its change. I am going to do that, but your support would be important. The adopted ordinance is actually more restrictive in many ways.

I made you and the Town aware of funding for Brownfield solar development, and I think if you really look at this as an opportunity, you could coordinate a project on Town land. See 2) above.

Thank you for your time.

Sincerely,

Christopher Warfel

Christopher Warfel, PE

DUAL METER INTERCONNECTION

Attachement A

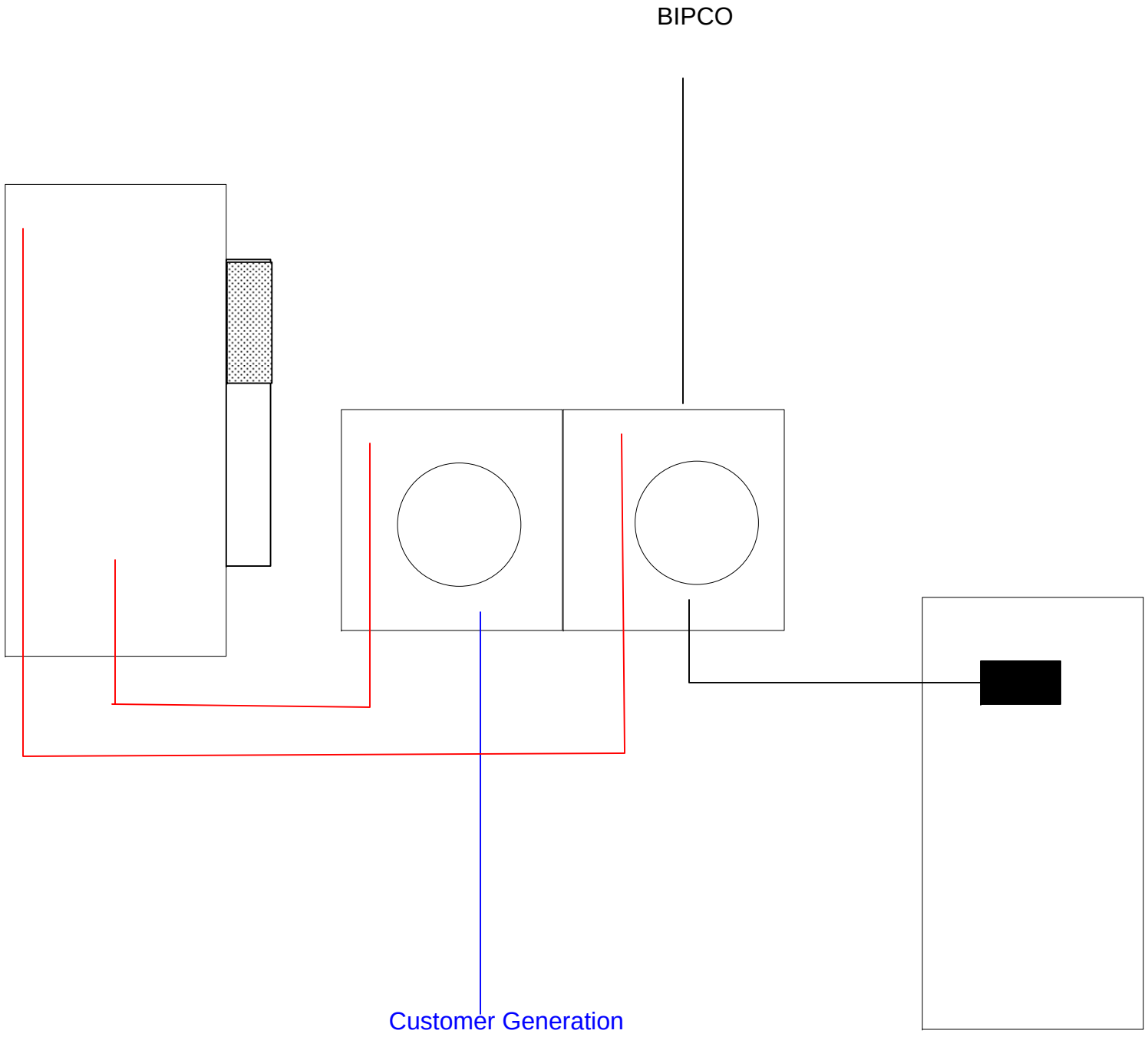

CIRCUIT KEY

TAG	CIRCUIT TYPE	DESCRIPTION	CONDUIT TYPE	NOTE/OTHER
C,D	Combined Subarrays	THWN-2 6 AWG w 10 EGC/G	3/4" PVC	3W with GND, detail not shown
E, F		THWN-2 6 AWG w 10 EGC/G	3/4" PVC	3W with GND

Attachement B

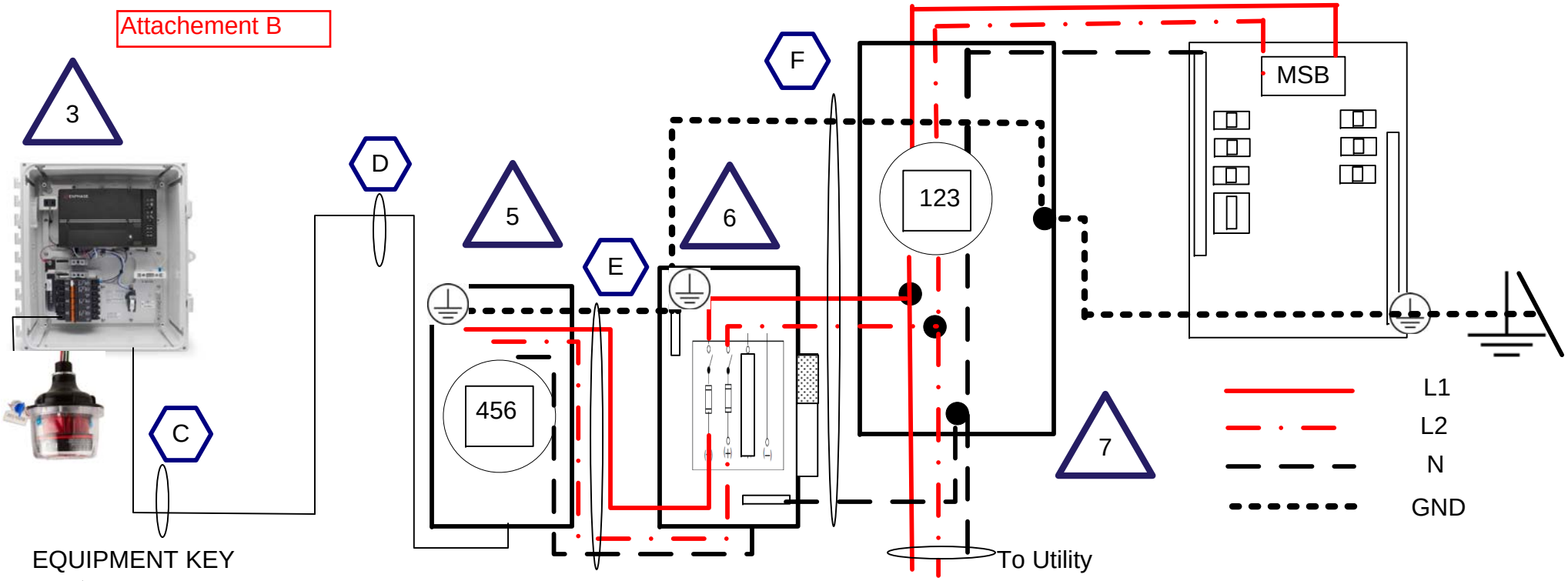

EQUIPMENT KEY

TAG	EQUIPMENT	DESCRIPTION	NOTE/OTHER
3	Enphase AC Disconnect/Combiner	Enphase Combiner w Envoy DAS	Grounded (-) conductor not broken, Connected with waterproof connector in DS for maintenance purposes
4			
5	Avoided Cost Meter		
6	Rapid Shutdiown Supply Side Disconnect Switch (DS)	Fused	60A, 240VAC 3W with GND,Neutral and Ground Bonded
7	Utility Meter		

ENTECH Engineering INCORPORATED

Title: Supply Side Connection with Avoided Cost Metering

Drawn by/date:	CGW 3/5/21		
Checked by/date:			
Notes:			

PV-2.0

ENTECH Engineering, Inc. PO Box 871, Block Island, RI 02807 (401)466-8978 Voice and Fax
www.entech-engineering.com

CIRCUIT KEY

TAG	CIRCUIT TYPE	DESCRIPTION	CONDUIT TYPE	NOTE/OTHER
C	Combined Subarrays	10 AWG 2W w EGC	.75" PVC	3W with G, connected in NEMA3R JB
D	Shed feeder from Home	6AWG w 6 EGC/GEC	underground	3W with G, connected in MSP

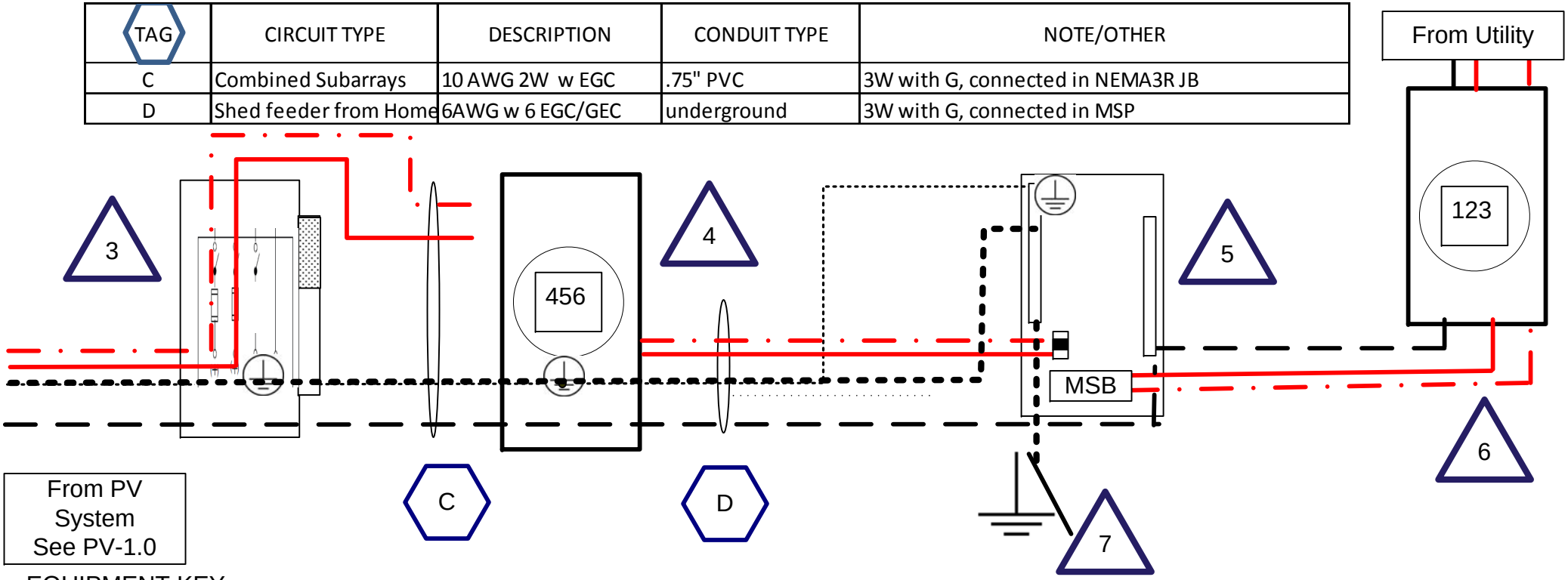

EQUIPMENT KEY

TAG	EQUIPMENT	DESCRIPTION	NOTE/OTHER
3	Rapid Shutdown Switch	240 VAC 30 A	External to shed
4	PV Production Meter		BIPCo provided, located in shed
5	Service Panel		Subpanel is connected with 20 A breaker with panel in accessory building
6	Utility Meter		
7	System Ground		

ENTECH Engineering INCORPORATED	*Title:* Typical Load Side Net Metering Schematic with Extra Utility Required Meter			PV-2.0
	Drawn by/date:	CGW 2/03/21		
	Checked by/date:			
	Notes:			

ENTECH Engineering, Inc. PO Box 871, Block Island, RI 02807 (401)466-8978 Voice and Fax
www.entech-engineering.com

Title 39
Public Utilities and Carriers

Chapter 26.4
Net Metering

R.I. Gen. Laws § 39-26.4-1

§ 39-26.4-1. Purpose.

The purpose of this chapter is to facilitate and promote installation of customer-sited, grid-connected generation of renewable energy; to support and encourage customer development of renewable generation systems; to reduce environmental impacts; to reduce carbon emissions that contribute to climate change by encouraging the local siting of renewable energy projects; to diversify the state's energy generation sources; to stimulate economic development; to improve distribution system resilience and reliability; and to reduce distribution system costs.

History of Section.
P.L. 2011, ch. 134, § 2; P.L. 2011, ch. 147, § 2.

Title 39
Public Utilities and Carriers

Chapter 26.4
Net Metering

R.I. Gen. Laws § 39-26.4-2

§ 39-26.4-2. Definitions.

Terms not defined in this section herein shall have the same meaning as contained in chapter 26 of this title. When used in this chapter:

(1) "Community remote net-metering system" means a facility generating electricity using an eligible net-metering resource that allocates net-metering credits to a minimum of one account for a system associated with low- or moderate-income housing eligible credit recipients, or three (3) eligible credit-recipient customer accounts, provided that no more than fifty percent (50%) of the credits produced by the system are allocated to one eligible credit recipient, and provided further at least fifty percent (50%) of the credits produced by the system are allocated to the remaining eligible credit recipients in an amount not to exceed that which is produced annually by twenty-five kilowatt (25 KW) AC capacity. The community remote net-metering system may transfer credits to eligible credit recipients in an amount that is equal to or less than the sum of the usage of the eligible credit recipient accounts measured by the three-year (3) average annual consumption of energy over the previous three (3) years. A projected annual consumption of energy may be used until the actual three-year (3) average annual consumption of energy over the previous three (3) years at the eligible credit recipient accounts becomes available for use in determining eligibility of the generating system. The community remote net-metering system may be owned by the same entity that is the customer of record on the net-metered account or may be owned by a third party.

(2) "Electric distribution company" shall have the same meaning as § 39-1-2, but shall not include Block Island Power Company or Pascoag Utility District, each of whom shall be required to offer net metering to customers through a tariff approved by the public utilities commission after a public hearing. Any tariff or policy on file with the public utilities commission on the date of passage of this chapter shall remain in effect until the commission approves a new tariff.

(3) "Eligible credit recipient" means one of the following eligible recipients in the electric distribution company's service territory whose electric service account or accounts may receive net-metering credits from a community remote net-metering system. Eligible credit recipients include the following definitions:

(i) Residential accounts in good standing.

(ii) "Low- or moderate-income housing eligible credit recipient" means an electric service account or accounts in good standing associated with any housing development or developments owned or operated by a public agency, nonprofit organization, limited-equity housing cooperative, or private developer that receives assistance under any federal, state, or municipal government program to assist the construction or rehabilitation of housing affordable to low- or moderate-income households, as defined in the applicable federal or state statute, or local ordinance, encumbered by a deed restriction or other covenant recorded in the land records of the municipality in which the housing is located, that:

(A) Restricts occupancy of no less than fifty percent (50%) of the housing to households with a gross, annual income that does not exceed eighty percent (80%) of the area median income as defined annually by the United States Department of Housing and Urban Development (HUD);

(B) Restricts the monthly rent, including a utility allowance, that may be charged to residents, to an amount that does not exceed thirty percent (30%) of the gross, monthly income of a household earning eighty percent (80%) of the area median income as defined annually by HUD;

(C) Has an original term of not less than thirty (30) years from initial occupancy.
Electric service account or accounts in good standing associated with housing developments that are under common ownership or control may be considered a single low- or moderate-income housing eligible credit recipient for purposes of this section. The value of the credits shall be used to provide benefits to tenants.

(iii) "Educational institutions" means public and private schools at the primary, secondary, and postsecondary levels.

(4) "Eligible net-metering resource" means eligible renewable energy resource, as defined in § 39-26-5 including biogas created as a result of anaerobic digestion, but, specifically excluding all other listed eligible biomass fuels.

(5) "Eligible net-metering system" means a facility generating electricity using an eligible net-metering resource that is reasonably designed and sized to annually produce electricity in an amount that is equal to, or less than, the renewable self-generator's usage at the eligible net-metering system site measured by the three-year (3) average annual consumption of energy over the previous three (3) years at the electric distribution account(s) located at the eligible net-metering system site. A projected annual consumption of energy may be used until the actual three-year (3) average annual consumption of energy over the previous three (3) years at the electric distribution account(s) located at the eligible net-metering system site becomes available for use in determining eligibility of the generating system. The eligible net-metering system may be owned by the same entity that is the customer of record on the net-metered accounts or may be owned by a third party that is not the customer of record at the eligible net-metering system site and which may offer a third-party, net-metering financing arrangement or net-metering financing arrangement, as applicable. Notwithstanding any other provisions of this chapter, any eligible net-metering resource: (i) Owned by a public entity, educational institution, hospital, nonprofit, or multi-municipal collaborative or (ii) Owned and operated by a renewable-generation developer on behalf of a public entity, educational institution, hospital, nonprofit, or multi-municipal collaborative through a net-

metering financing arrangement shall be treated as an eligible net-metering system and all accounts designated by the public entity, educational institution, hospital, nonprofit, or multi-municipal collaborative for net metering shall be treated as accounts eligible for net metering within an eligible net-metering system site.

(6) "Eligible net-metering system site" means the site where the eligible net-metering system or community remote net-metering system is located or is part of the same campus or complex of sites contiguous to one another and the site where the eligible net-metering system or community remote net-metering system is located or a farm in which the eligible net-metering system or community remote net-metering system is located. Except for an eligible net-metering system owned by or operated on behalf of a public entity, educational institution, hospital, nonprofit, or multi-municipal collaborative through a net-metering financing arrangement, the purpose of this definition is to reasonably assure that energy generated by the eligible net-metering system is consumed by net-metered electric service account(s) that are actually located in the same geographical location as the eligible net-metering system. All energy generated from any eligible net-metering system is, and will be considered, consumed at the meter where the renewable energy resource is interconnected for valuation purposes. Except for an eligible net-metering system owned by, or operated on behalf of, a public entity, educational institution, hospital, nonprofit, or multi-municipal collaborative through a net-metering financing arrangement, or except for a community remote net-metering system, all of the net-metered accounts at the eligible net-metering system site must be the accounts of the same customer of record and customers are not permitted to enter into agreements or arrangements to change the name on accounts for the purpose of artificially expanding the eligible net-metering system site to contiguous sites in an attempt to avoid this restriction. However, a property owner may change the nature of the metered service at the accounts at the site to be master metered in the owner's name, or become the customer of record for each of the accounts, provided that the owner becoming the customer of record actually owns the property at which the account is located. As long as the net-metered accounts meet the requirements set forth in this definition, there is no limit on the number of accounts that may be net metered within the eligible net-metering system site.

(7) "Excess renewable net-metering credit" means a credit that applies to an eligible net-metering system or community remote net-metering system for that portion of the production of electrical energy beyond one hundred percent (100%) and no greater than one hundred twenty-five percent (125%) of the renewable self-generator's own consumption at the eligible net-metering system site or the sum of the usage of the eligible credit recipient accounts associated with the community remote net-metering system during the applicable billing period. Such excess renewable net-metering credit shall be equal to the electric distribution company's avoided cost rate, which is hereby declared to be the electric distribution company's standard-offer service kilowatt hour (KWh) charge for the rate class and time-of-use billing period (if applicable) applicable to the customer of record for the eligible net-metering system or applicable to the customer of record for the community remote net-metering system. The commission shall have the authority to make determinations as to the applicability of this credit to specific generation facilities to the extent there is any uncertainty or disagreement.

(8) "Farm" shall be defined in accordance with § 44-27-2, except that all buildings associated with the farm shall be eligible for net-metering credits as long as: (i) The buildings are owned by the same entity operating the farm or persons associated with operating the farm; and (ii) The buildings are on the same farmland as the project on either a tract of land contiguous with, or reasonably proximate to, such farmland or across a public way from such farmland.

(9) "Hospital" means and shall be defined and established as set forth in chapter 17 of title 23.

(10) "Multi-municipal collaborative" means a group of towns and/or cities that enter into an agreement for the purpose of co-owning a renewable-generation facility or entering into a financing arrangement pursuant to subsection (14).

(11) "Municipality" means any Rhode Island town or city, including any agency or instrumentality thereof, with the powers set forth in title 45.

(12) "Net metering" means using electrical energy generated by an eligible net-metering system for the purpose of self-supplying electrical energy and power at the eligible net-metering system site, or with respect to a community remote net-metering system, for the purpose of generating net-metering credits to be applied to the electric bills of the eligible credit recipients associated with the community net-metering system. The amount so generated will thereby offset consumption at the eligible net-metering system site through the netting process established in this chapter, or with respect to a community remote net-metering system, the amounts generated in excess of that amount will result in credits being applied to the eligible credit-recipient accounts associated with the community remote net-metering system.

(13) "Net-metering customer" means a customer of the electric distribution company receiving and being billed for distribution service whose distribution account(s) are being net metered.

(14) "Net-metering financing arrangement" means arrangements entered into by a public entity, educational institution, hospital, nonprofit, or multi-municipal collaborative with a private entity to facilitate the financing and operation of a net-metering resource, in which the private entity owns and operates an eligible net-metering resource on behalf of a public entity, educational institution, hospital, nonprofit, or multi-municipal collaborative, where: (i) The eligible net-metering resource is located on property owned or controlled by the public entity, educational institution, hospital, or one of the municipalities, as applicable; and (ii) The production from the eligible net-metering resource and primary compensation paid by the public entity, educational institution, hospital, nonprofit, or multi-municipal collaborative to the private entity for such production is directly tied to the consumption of electricity occurring at the designated net-metered accounts.

(15) "Nonprofit" means a nonprofit corporation as defined and established through chapter 6 of title 7, and shall include religious organizations that are tax exempt pursuant to 26 U.S.C. § 501(d).

(16) "Person" means an individual, firm, corporation, association, partnership, farm, town or city of the state of Rhode Island, multi-municipal collaborative, or the state of Rhode Island or any department of the state government, governmental agency, or public instrumentality of the state.

(17) "Project" means a distinct installation of an eligible net-metering system or a community remote net-metering system. An installation will be considered distinct if it is installed in a different location, or at a different time, or involves a different type of renewable energy.

(18) "Public entity" means the federal government, the state of Rhode Island, municipalities, wastewater treatment facilities, public transit agencies, or any water distributing plant or system employed for the distribution of water to the consuming public within this state including the water supply board of the city of Providence.

(19) "Renewable net-metering credit" means a credit that applies to an eligible net-metering system or a community remote net-metering system up to one hundred percent (100%) of either the renewable self-generator's usage at the eligible net-metering system site or the sum of the usage of the eligible credit-

recipient accounts associated with the community remote net-metering system over the applicable billing period. This credit shall be equal to the total kilowatt hours of electrical energy generated up to the amount consumed on-site, and/or generated up to the sum of the eligible credit-recipient account usage during the billing period multiplied by the sum of the distribution company's:

(i) Standard-offer service kilowatt-hour charge for the rate class applicable to the net-metering customer, except that for remote public entity and multi-municipality collaborative net-metering systems that submit an application for an interconnection study on or after July 1, 2017, and community remote net-metering systems, the standard-offer service kilowatt-hour charge shall be net of the renewable energy standard charge or credit;

(ii) Distribution kilowatt-hour charge;

(iii) Transmission kilowatt-hour charge; and

(iv) Transition kilowatt-hour charge.
Notwithstanding the foregoing, except for systems that have requested an interconnection study for which payment has been received by the distribution company, or if an interconnection study is not required, a completed and paid interconnection application, by December 31, 2018, the renewable net-metering credit for all remote public entity and multi-municipal collaborative net-metering systems shall not include the distribution kilowatt-hour charge commencing on January 1, 2050.

(20) "Renewable self-generator" means an electric distribution service customer of record for the eligible net-metering system or community remote net-metering system at the eligible net-metering system site which system is primarily designed to produce electrical energy for consumption by that same customer at its distribution service account(s), and/or, with respect to community remote net-metering systems, electrical energy which generates net-metering credits to be applied to offset the eligible credit-recipient account usage.

(21) "Third party" means and includes any person or entity, other than the renewable self-generator, who or that owns or operates the eligible net-metering system or community remote net-metering system on the eligible net-metering system site for the benefit of the renewable self-generator.

(22) "Third-party, net-metering financing arrangement" means the financing of eligible net-metering systems or community remote net-metering systems through lease arrangements or power/credit purchase agreements between a third party and renewable self-generator, except for those entities under a public entity net-metering financing arrangement. A third party engaged in providing financing arrangements related to such net-metering systems with a public or private entity is not a public utility as defined in § 39-1-2.

History of Section.
P.L. 2011, ch. 134, § 2; P.L. 2011, ch. 147, § 2; P.L. 2014, ch. 493, § 1; P.L. 2014, ch. 524, § 1; P.L. 2016, ch. 149, § 3; P.L. 2016, ch. 163, § 3; P.L. 2017, ch. 188, § 1; P.L. 2017, ch. 306, § 1; P.L. 2017, ch. 451, § 17; P.L. 2020, ch. 79, art. 1, § 19.

Title 39
Public Utilities and Carriers

Chapter 26.4
Net Metering

R.I. Gen. Laws § 39-26.4-3

§ 39-26.4-3. Net metering.

(a) The following policies regarding net metering of electricity from eligible net-metering systems and community remote net-metering systems and regarding any person that is a renewable self-generator shall apply:

(1) (i) The maximum allowable capacity for eligible net-metering systems, based on nameplate capacity, shall be ten megawatts (10 MW), effective sixty (60) days after passage. The aggregate amount of net metering in the Block Island Utility District doing business as Block Island Power Company and the Pascoag Utility District shall not exceed a maximum percentage of peak load for each utility district as set by the utility district based on its operational characteristics, subject to commission approval; and

(ii) Through December 31, 2018, the maximum aggregate amount of community remote net-metering systems built shall be thirty megawatts (30 MW). Any of the unused MW amount after December 31, 2018, shall remain available to community remote net-metering systems until the MW aggregate amount is interconnected. After December 31, 2018, the commission may expand or modify the aggregate amount after a public hearing upon petition by the office of energy resources. The commission shall determine within six (6) months of such petition being docketed by the commission whether the benefits of the proposed expansion exceed the cost. This aggregate amount shall not apply to any net-metering financing arrangement involving public entity facilities, multi-municipal collaborative facilities, educational institutions, the federal government, hospitals, or nonprofits. By June 30, 2018, the commission shall conduct a study examining the cost and benefit to all customers of the inclusion of the distribution charge as a part of the net-metering calculation.

(2) For ease of administering net-metered accounts and stabilizing net-metered account bills, the electric distribution company may elect (but is not required) to estimate for any twelve-month (12) period:

(i) The production from the eligible net-metering system or community remote net-metering system; and

(ii) Aggregate consumption of the net-metered accounts at the eligible net-metering system site or the sum of the consumption of the eligible credit-recipient accounts associated with the community remote net-metering system, and establish a monthly billing plan that reflects the expected credits that would be applied to the net-metered accounts over twelve (12) months. The billing plan would be designed to even out monthly billings over twelve (12) months, regardless of actual production and usage. If such election is made by the electric distribution company, the electric distribution company would reconcile payments and credits under the billing plan to actual production and consumption at the end of the twelve-month (12) period and apply any credits or charges to the net-metered accounts for any positive or negative difference, as applicable. Should there be a material change in circumstances at the eligible net-metering system site or associated accounts during the twelve-month (12) period, the estimates and credits may be adjusted by the electric distribution company during the reconciliation period. The electric distribution company also may elect (but is not required) to issue checks to any net-metering customer in lieu of billing credits or carry-forward credits or charges to the next billing period. For residential-eligible net-metering systems and community remote net-metering systems twenty-five kilowatts (25 KW) or smaller, the electric distribution company, at its option, may administer renewable net-metering credits month to month allowing unused credits to carry forward into the following billing period.

(3) If the electricity generated by an eligible net-metering system or community remote net-metering system during a billing period is equal to, or less than, the net-metering customer's usage at the eligible net-metering system site or the sum of the usage of the eligible credit-recipient accounts associated with the community remote net-metering system during the billing period, the customer shall receive renewable net-metering credits, that shall be applied to offset the net-metering customer's usage on accounts at the eligible net-metering system site, or shall be used to credit the eligible credit-recipient's electric account.

(4) If the electricity generated by an eligible net-metering system or community remote net-metering system during a billing period is greater than the net-metering customer's usage on accounts at the eligible net-metering system site or the sum of the usage of the eligible credit-recipient accounts associated with the community remote net-metering system during the billing period, the customer shall be paid by excess renewable net-metering credits for the excess electricity generated up to an additional twenty-five percent (25%) beyond the net-metering customer's usage at the eligible net-metering system site, or the sum of the usage of the eligible credit-recipient accounts associated with the community remote net-metering system during the billing period; unless the electric distribution company and net-metering customer have agreed to a billing plan pursuant to subsection (a)(2).

(5) The rates applicable to any net-metered account shall be the same as those that apply to the rate classification that would be applicable to such account in the absence of net metering, including customer and demand charges, and no other charges may be imposed to offset net-metering credits.

(b) The commission shall exempt electric distribution company customer accounts associated with an eligible net-metering system from back-up or standby rates commensurate with the size of the eligible net-metering system, provided that any revenue shortfall caused by any such exemption shall be fully recovered by the electric distribution company through rates.

(c) Any prudent and reasonable costs incurred by the electric distribution company pursuant to achieving compliance with subsection (a) and the annual amount of any renewable net-metering credits or excess renewable net-metering credits provided to accounts associated with eligible net-metering systems or community remote net-metering systems, shall be aggregated by the distribution company and billed to all distribution customers on an annual basis through

a uniform, per-kilowatt-hour (KWh) surcharge embedded in the distribution component of the rates reflected on customer bills.

(d) The billing process set out in this section shall be applicable to electric distribution companies thirty (30) days after the enactment of this chapter.

History of Section.
P.L. 2011, ch. 134, § 2; P.L. 2011, ch. 147, § 2; P.L. 2014, ch. 200, § 3; P.L. 2014, ch. 216, § 3; P.L. 2016, ch. 149, § 3; P.L. 2016, ch. 163, § 3; P.L. 2017, ch. 155, § 1; P.L. 2017, ch. 164, § 1; P.L. 2017, ch. 188, § 1; P.L. 2017, ch. 306, § 1; P.L. 2021, ch. 315, § 1, effective July 9, 2021; P.L. 2021, ch. 316, § 1, effective July 9, 2021.

Title 39
Public Utilities and Carriers

Chapter 26.4
Net Metering

R.I. Gen. Laws § 39-26.4-4

§ 39-26.4-4. Liberal construction of chapter required.

This chapter shall be construed liberally in aid of its declared purposes.

History of Section.
P.L. 2011, ch. 134, § 2; P.L. 2011, ch. 147, § 2.

Title 39
Public Utilities and Carriers

Chapter 26.4
Net Metering

R.I. Gen. Laws § 39-26.4-5

§ 39-26.4-5. Severability.

If any provision of this chapter or the application thereof to any person or circumstances is held invalid, the invalidity shall not affect other provisions or applications of the chapter that can be given effect without the invalid provision or application, and to this end the provisions of this chapter are declared to be severable.

History of Section.
P.L. 2011, ch. 134, § 2; P.L. 2011, ch. 147, § 2; P.L. 2020, ch. 79, art. 1, § 19.

RESPONSES TO CHRIS WARFEL CORRESPONDENCE
PROVIDED BY JEFFERY M. WRIGHT

I would like to respond publicly to several of Mr. Warfel's comments.

1) The meter configuration drawings that Mr. Warfel presented as coming from BIUD are not a product of BIUD and I have repeatedly told him that. I am not sure where Mr. Warfel got the first drawing as, I too, have never seen anything like that. Drawings 2 and 3 are a product of Entech Engineering as far as I can tell as they are on Entech Engineering letterhead. Please find below the meter configuration that was once given to Mr. Warfel, and then two other simple drawings that have been used in several BIUD board meetings.

BLOCK ISLAND UTILITY DISTRICT
SOLAR METER WIRING DIAGRAM

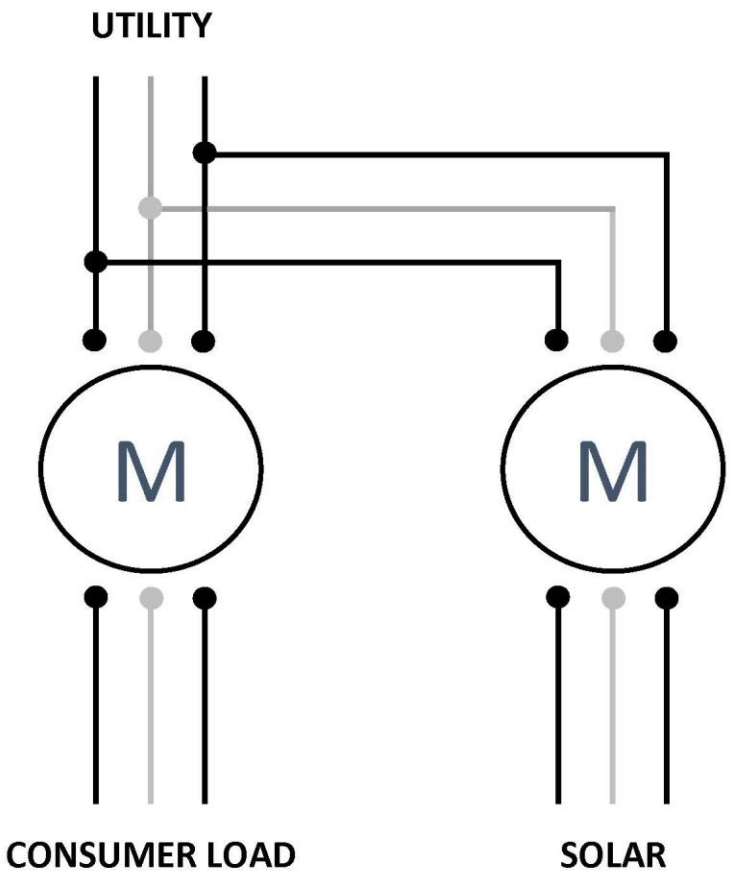

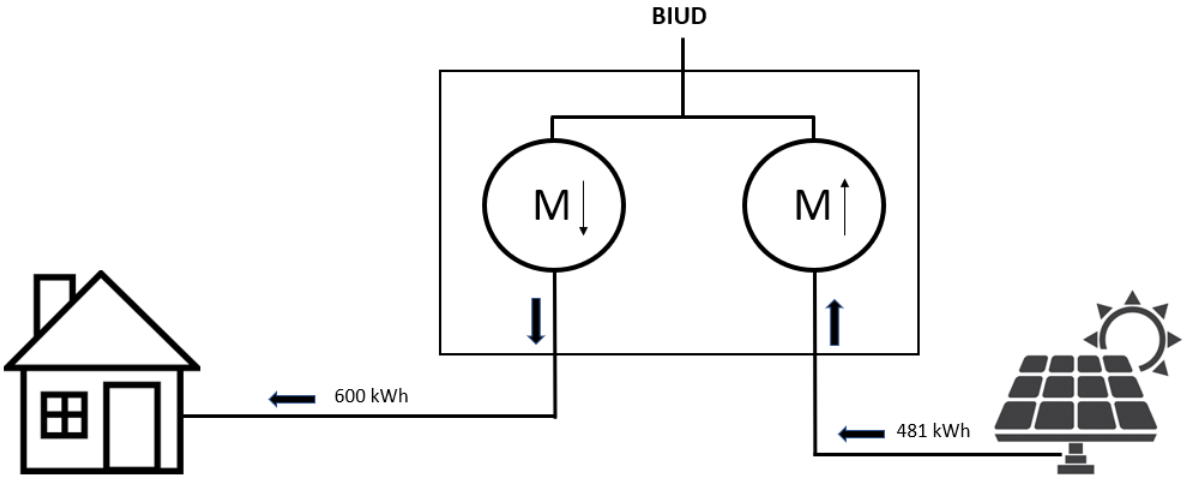

More technical wiring diagrams drawing will be posted to our website once our new tariff is approved but these shown are simple examples that were used for discussion purposes.

4) The statistics that measure the effectiveness of BIUD's Energy Efficiency Program are prepared each year prior to filing next year's plan. They are reviewed by the DPUC and Commission as part of the annual plan approval process. Without creating out of cycle work for our consultants, I can offer the following high-level assessment of the plan and how it is being utilized by our members.

Since the start of the plan year on June 1, 2021, thirty-four audits have been conducted. The breakdown by rate class and month is shown in the chart below:

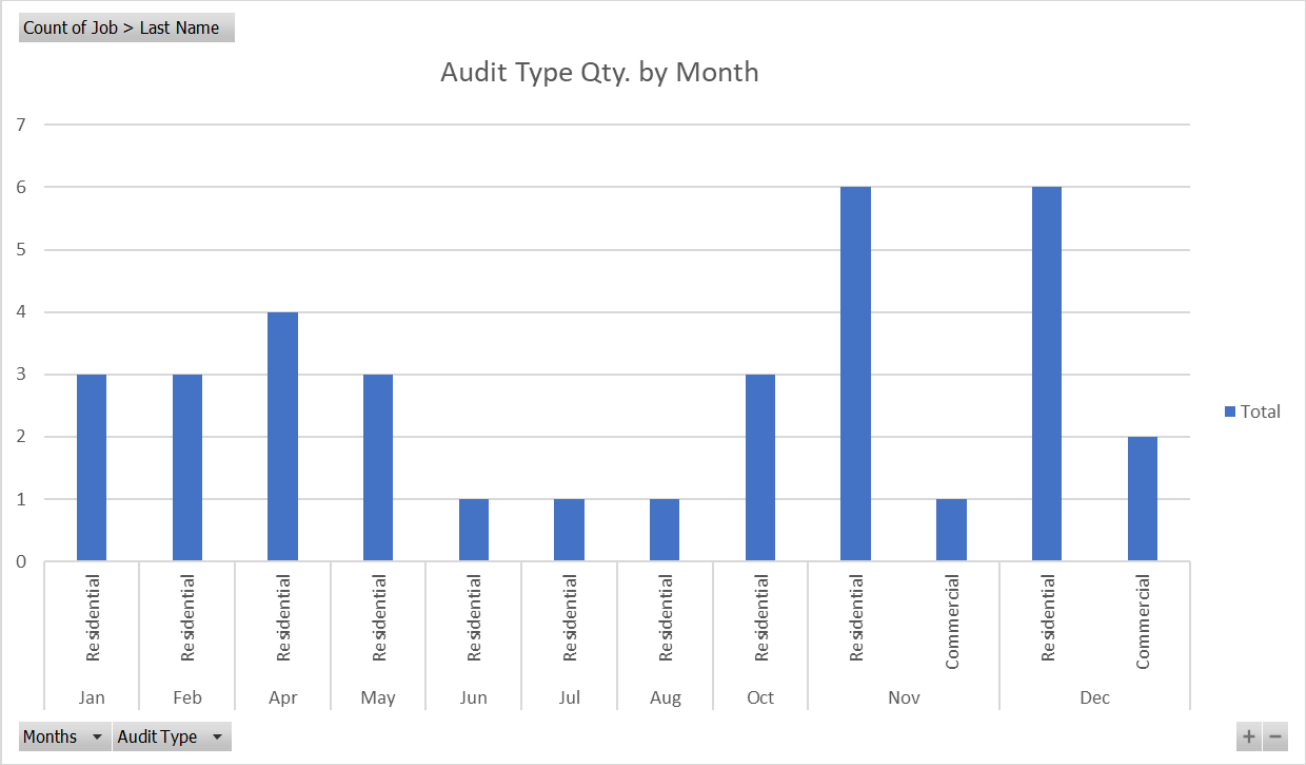

Shown below are cost reports and the detail associated with direct installed measures and YTD kWh savings.

Year: 2021

	Jan	Feb	Mar	Apr	May	Jun	Jul	Aug	Sep	Oct	Nov	Dec	Total
Administration Fees	$ 275	$ 275	$ 275	$ 275	$ 275	$ 275	$ 275	$ 275	$ 275	$ 275	$ 275	$ 275	$ 3,300
Audit Fees	$ 726	$ 726	$ -	$ 968	$ 726	$ -	$ -	$ -	$ -	$ -			$ 3,146
Direct Install Materials	$ 220	$ 406	$ -	$ 491	$ 269	$ 105	$ 129	$ 121	$ -	$ 285	$ 773	$ 725	$ 3,524
Travel Fee	$ 1,110	$ 370		$ 370	$ 370	$ 370	$ 370	$ 370	$ 370	$ 743	$ 370	$ 370	$ 5,183
Total	**$ 2,331**	**$ 1,777**	**$ 275**	**$ 2,104**	**$ 1,640**	**$ 750**	**$ 774**	**$ 766**	**$ 645**	**$ 1,303**	**$ 1,418**	**$ 1,370**	**$15,153**

Direct Installed Measures:	Jan	Feb	Mar	Apr	May	Jun	Jul	Aug	Sep	Oct	Nov	Dec	Total	Average
LED Bulbs	25	40	0	40	25	12	12	12	0	35	58	61	320	60
Bulbs Installed YTD	25	65	65	105	130	142	154	166	166	201	259	320		
Savings in kWh	923	1476	0	1476	923	443	443	443	0	1292	2140	2251	11808	
YTD Savings in kWh	923	2399	2399	3875	4797	5240	5683	6125	6125	7417	9557	11808		
Smart Strips	2	3		4	3	1	1	1	0	3	10	7	35	3
Installed YTD	2	5	5	9	12	13	14	15	15	18	28	35		
Savings in kWh	43.2	64.8	0	86.4	64.8	21.6	21.6	21.6	0	64.8	216	151.2	756	
YTD Savings in kWh	43	108	108	194	259	281	302	324	324	389	605	756		
Grounded Power Switch	0	3	0	4	2	1	1	1	0	0	3	4	19	2
Installed YTD	0	3	3	7	9	10	11	12	12	12	15	19		
Savings in kWh													0	
YTD Savings in kWh	0	0	0	0	0	0	0	0	0	0	0	0		
Aerators	1	4	0	6	2	0	0	2	0	0	10	10	35	3
Installed YTD	1	5	5	11	13	13	13	15	15	15	25	35		
Savings in kWh	36.6	146.4	0	219.6	73.2	0	0	73.2	0	0	366	366	1281	
YTD Savings in kWh	37	183	183	403	476	476	476	549	549	549	915	1281		
Shower Heads	1	2	0	5	1	0	2	0	0	0	5	6	22	2
Installed YTD	1	3	3	8	9	9	11	11	11	11	16	22		
Savings in kWh	129	258	0	645	129	0	258	0	0	0	645	774	2838	
YTD Savings in kWh	129	387	387	1032	1161	1161	1419	1419	1419	1419	2064	2838		

Savings:

Total YTD Saving in KWh	966	2,507	2,507	4,069	5,056	5,521	5,985	6,449	6,449	7,806	10,162	12,564	12564	

Our annual filing will be prepared for a March filing and will be brought before the BOD for your approval. It will thorough performance data as well as plans for the 2022/23 plan.

The feedback we receive from our members who have participated in the program is positive.

5) The topic of smart meters and the platforms that BIUD utilizes to collect, store and analyze meter data is misunderstood. BIUD utilizes several integrated software platforms that are used to collect, store and analyze meter data, not just SmartHub.

   The most important platform that BIUD utilizes is our meter (AMI) system provided by Trilliant Technologies. Trilliant's system collects all meter date in five-minute intervals and transmits that data to their data center at their headquarters using cellular technology. This data is made available to BIUD through their "On-Ramp" platform. BIUD uses this for engineering purposes and has, on many occasions, shared this data with external engineers, electricians, and solar developers. This is the raw data that is easily exported and manipulated for engineering purposes.

   A very limited example of the meter data that BIUD collects is shown in the screen shot on the following page. It includes voltage, usage, demand, time of use, and temperature among others. The system is viewed only by authorized users through a virtual private network (VPN) between BIUD and Trilliant.

Readings

- ▼ Bulk/Register Data
  - ▼ Summation

Reading Type	CIM Code	Latest Reading	Timestamp	Quality
Delivered Bulk Energy kWh	0.0.1.1.0.12.0.0.0.3.72	29829.704	Jan 25, 2022 05:00:00 GMT	Data Valid
Received Bulk Energy kWh	0.0.1.19.0.12.0.0.0.3.72	0.000	Jan 25, 2022 05:00:00 GMT	Data Valid
Season	0.0.0.0.2.54.0.0.0.0.111	0	Jan 25, 2022 05:00:00 GMT	Data Valid

  - ▶ Demand
  - ▶ Cumulative Demand
- ▼ TOU
  - ▶ Tier A
  - ▶ Tier B
  - ▶ Tier C
  - ▶ Tier D
- ▼ Interval Data
  - ▼ 5 min Interval

Reading Type	CIM Code	Latest Reading	Timestamp	Quality
5 min Average Voltage Phase-A V	6.2.4.0.0.54.0.0.128.0.29	244.10	Jan 25, 2022 18:45:00 GMT	Data Valid
5 min Max Voltage Phase-A V	6.8.0.0.0.54.0.0.128.0.29	244.60	Jan 25, 2022 18:45:00 GMT	Data Valid
Delivered 5 min Energy kWh	6.0.4.1.0.12.0.0.0.3.72	0.031	Jan 25, 2022 18:45:00 GMT	Data Valid

- ▼ Power Quality Data

Reading Type	CIM Code	Latest Reading	Timestamp	Quality
Power Factor Phase-A	0.0.6.0.0.38.0.0.128.0.65	1.00	Jan 25, 2022 15:03:45 GMT	Data Valid
RMS Line-to-Neutral Voltage Phase-A V	0.15.6.0.0.54.0.0.128.0.29	246.00	Jan 25, 2022 15:03:45 GMT	Data Valid
RMS Line-to-Neutral Voltage Phase-C V	0.15.6.0.0.54.0.0.32.0.29	0.30	Jan 25, 2022 15:03:45 GMT	Data Valid
Temperature C	0.0.6.0.0.46.0.0.0.0.23	15.00	Jan 25, 2022 15:03:45 GMT	Data Valid

It is this same system that Tracy uses to assist members in identifying abnormal usage patterns and high usage. A screen-shot of one tool that Tracy uses is shown on the following page.

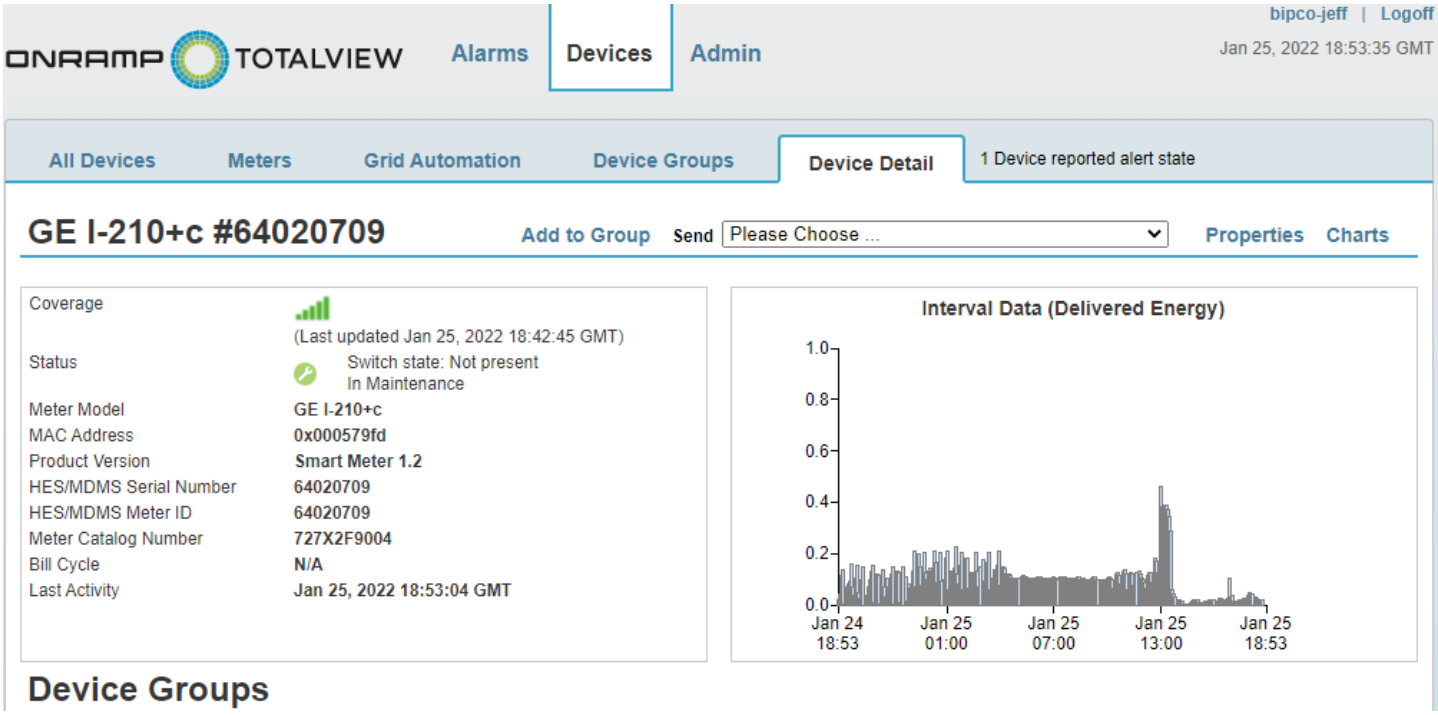

The Trilliant system is nearly ten years old now and is expected to last another ten years before major upgrades are warranted.

The next platform that BIUD utilizes is the National Information Solutions Cooperative, Inc (NISC) suite of software solutions. NISC is a member-owned and governed software cooperative based in St Louis Missouri.

At the center of the NISC applications is a front-end Meter Data Management System (MDMS). Every four hours, Trilliant sends meter files to our MDMS system that is hosted by NISC in St Louis, Missouri. The MDMS stores five-minute interval data from every meter indefinitely. Outage notifications are transferred to NISC in real-time.

Other NISC applications include our outage management system, billing system, mapping system, and our accounting system. All platforms are fully integrated. Our systems are the same systems used by nearly 1,000 cooperatives in the country. The expandability of these systems is unlimited.

Lastly there is SmartHub. SmartHhub is a member-facing mobile application for members to pay bills online with, view their bills, receive BIUD alerts and also view high-level usage data. It is not intended to be used for engineering purposes nor is there any real export capability. Keep in mind, this was intentionally created with simplicity in mind for a wide range of members.

I would love the opportunity to demonstrate all the software platforms that we utilize to provide the best member service possible. Everyone at BIUD has a high level of confidence in our systems as we rely on them every day. I would like the BOD and our members to have that same level of confidence.

I can say with certainty that BIUD has the most advanced technology of any Rhode Island electric utility and we do this very cost-effectively because they are all meter-based contracts. The contract structures make it affordable for us while providing access to some of the most powerful software available.

At the core of everything we do with data is our member's privacy. We are required to maintain our member's privacy and do not share any information outside of BIUD. Sharing member's SmartHub data is not something that BIUD allows without the member's permission. Each member most likely has banking or credit card information stored within and should protect their personal information.

BIUD is always willing to assist any member, or member's representative with engineering help using our meter data through Trilliant On-Ramp or our MDMS. We have done that many times for Mr. Warfel but it is has not been using SmartHub. We will continue to provide that service to anyone who is working for our members provided they are pre-authorized by that member. Our member data is otherwise protected and not shared with anyone.

I hope this helps clear up some of the misinformation regarding our software and capabilities.

The other items that Mr. Warfel has brought forward will be addressed at the meeting at the discretion of the BOD.

AGENDA ITEM 4

COMMISSIONER'S REPORT

AGENDA ITEM 5

APPROVAL OF MINUTES

Block Island Utility District
December 18, 2021
11:00 AM

THIS MEETING WAS HELD IN PERSON AT THE BLOCK ISLAND COMMUNITY CENTER ON CHAPEL STREET, BLOCK ISLAND, RI

Minutes

Participating BOD Members Present: Barbara MacMullan, Mary Jane Balser, Elliot Taubman, John Warfel and Tom Risom.

Also Present: President Jeffery Wright, Renee Myers, Ken Tripp, Dave Lewis and Chris Warfel.

Board Chair Barbara MacMullan called the meeting to order at 11:02 AM.

1. **Public Input**
    - Chris Warfel expressed his desire to have the board meeting materials posted to the website sooner and requested that a dual meter drawing for net metering be posted to the website. President Jeffery Wright promised that all necessary materials will be posted to the website pertaining to the net metering program after the tariff was approved. He also stressed that the meeting materials would be posted as soon as they were available but sometimes that is not until 48 hours prior to the meeting.
    - John Warfel had a question pertaining to BIUD's requirements for service secondary wire and pipe. President Jeffery Wright responded by explaining BIUD's policy of allowing the member, or member's electrician to size all secondary equipment and that all secondary equipment was required to meet the National Electric Code (NEC) which is verified by the town inspection/permitting process.

2. **Correspondence from a Concerned BIUD Member and Chris Warfel**
    - A letter from a concerned member was shared pertaining to the wind farm curtailments during the summer. The letter is on file in the December 18, 2021 board materials.
    - Chris Warfel asked the BIDU Board of Commissioners to perform an inventory of available BIUD land/property to determine if there were any public housing opportunities. His request is on file and will be addressed in a future BOD meeting.

3. **Commissioner's Report**
    - Board Chair Barbara MacMullan had nothing to report.

4. **Approve Meeting Minutes: November 20, 2021**
    - Board Chair Barbara MacMullan made a motion to approve the minutes from the November 20, 2021 meeting as presented. John Warfel seconded the motion and it passed unanimously.

5. **President's Report**
    - President Jeffery Wright presented his report starting with the news that

National Grid was modifying its FERC tariff pertaining to the BITS charge. He explained the potential changes and would provide future updates as National Grid filed its new tariffs.

- Mr. Wright explained that PASCOAG has recently had its net metering tariff approved by the PUC and explained the similarities to BIUD's new proposed tariff.
- Mr. Wright provided updates on the level three charger that may be housed at the power company.
- Mr. Wright also presented a potential utility-scale battery storage system that had been provided by a New England vendor. He asked the BOD to support engaging ENE to help with evaluating this proposal and helping to facilitate a formal bid process. The BOD supported engaging ENE.
- Mr. Wright presented an update to the voltage conversion project. He introduced Ken Tripp who had been retained as the on-island project manager.

6. Approve $1.5M CFC Loan for the Voltage Conversion Project

- Mr. Wright explained that this loan also included the $300K contingency payment associated with the McGinness lawsuit and that he had not warned this item correctly. He asked the BOD to hold a special meeting to approve the CFC resolution. The BOD agreed to meet on December 27th. Mr. Wright committed to scheduling the meeting accordingly.

7. Review and Act Upon the 2022 Capital Budget

- Mr. Wright presented a capital budget for 2022 (on file) and asked for approval.
- Commissioner Elliot Taubman made a motion to approve the 2022 Capital Budget as presented. Tom Risom seconded the motion and it passed unanimously.

8. Strategic Planning Discussion

- After a short discussion it was agreed that Mr. Wright would discuss an on-site strategic planning session with CFC sometime before summer.

Board Chair Barbara MacMullan moved to adjourn the meeting at 12:35 PM. John Warfel seconded the motion. The motion was approved unanimously, and the meeting was adjourned.

APPROVED:
POSTED:

Block Island Utility District
December 27, 2021
3:30 PM

THIS MEETING WAS HELD IN PERSON AT THE WASHINGTON TRUST BLOCK ISLAND BRANCH CONFERENCE ROOM. IT WAS OPEN TO THE PUBLIC.

Minutes

Participating BOD Members Present: Barbara MacMullan, John Warfel and Tom Risom.

Board Chair Barbara MacMullan called the meeting to order at 3:35 PM.

1. **Approve the CFC Resolution and Incumbency for the $1.5M Voltage Conversion Loan and the $300K Contingency Award to the McGinnes Trust.**
    - Board Chair Barbara MacMullan moved to approve the CFC Certificate of Incumbency and Resolution as presented. Treasurer Tom Risom seconded the motion. The motion was approved unanimously. The CFC Certification of Incumbency and Resolution was executed by Treasurer John Warfel.

Board Chair Barbara MacMullan moved to adjourn the meeting at 3:40 PM. John Warfel seconded the motion. The motion was approved unanimously, and the meeting was adjourned.

APPROVED:
POSTED:

AGENDA ITEM 6

PRESIDENT'S REPORT

PRESIDENT'S UPDATE
JANUARY 27, 2022

National Grid Cable Outage Update/BITS Charge Changes

I have received a copy of the National Grid tariff changes and we are reviewing them now for consistency with what the RI-DPUC negotiated with them. As a reminder, these are the changes proposed and the effect on BIUD.

1) They have come to a settlement with the DPUC on their over-collection from the cable charges. Although the final order has not been released, National Grid has reached out to discuss several changes to their charges that will positively impact BIUD.
    a. BIUD's monthly BITS costs will decrease approximately 40% from $3,834.
    b. National Grid is refunding BIUD (writing a check to) for approximately $32,000.
    c. The DPUC has capped what National Grid can charge for the cable at $144M. (Current NBV + $30M for Reburial). This is critical in limiting our risk of exposure to cost overruns from their work.

Voltage Conversion Update

Contract crews have recently run approximately 80% of the required neutral conductor. BIUD crews have set 2/5 step transformer poles. BIUD procurement is on track. National Grid has given us an estimate of 4/25/22 for when they will be ready. I will further explain the sequence of work at the meeting.

2022 Pole Replacement Program

BIUD crews are setting all the poles scheduled in the 2022 program. With the assistance of Chris Reeve, they have set approximately 40/120 so far. Work is scheduled for Coast Guard Road, Lake Side Drive, and other critical locations that they identified as weak points. We have changed poles and transformer banks at the Harborside, Island Manor, and Neptune House. I will provide more detail at the meeting.

Tree Trimming

The tree crews are back on the island and have been working for two weeks. Their goal this year is to travel every foot of every line and trim to at least spec (6' clearance to primary conductors and 3' to secondary). They have nearly completed all of Corn Neck in their first two weeks.

2021 Audit

The audit process has begun. We do not have soft-close 2021 results yet but will have them for the February meeting. We have completed material inventory, Tracy has processed the monthly billing registers and Dave Bebyn will have a trial balance for the auditors to begin working with by February 4th. Our goal is to present a draft audit to the BOD in our March meeting, followed by approval of the final draft in our April meeting. We are required to submit our audit to CFC by April 30th.

Staffing Plan

David Milner has announced his retirement and will be departing on his 50th anniversary in April. I plan to post a job soon for his replacement. His replacement will be a hybrid line worker/utility worker/generator operator. Our goal is for all five field personnel to have diverse skills that can meet our line construction and maintenance needed as well as our generator operating needs. Of course, each individual will have their own area of expertise that will complement the entire crew.

EV Level 3 Car Charger Update

I will provide a verbal update at the meeting.

Housing Update

The town expects the appraisal on BIUD's corner lot to be completed by the end of January. I will provide a description of the evolution of this project so everyone is up to speed so we can be contemplating the various outcomes.

EV Level 3 Car Charger Update

I will provide a verbal update at the meeting.

EV Charging Rate

I have asked Dave Bebyn and Richard LaCapra to assist in developing a time of use rate for Level 2 and 3 EV chargers. This will eventually be the basis for the rate that will be applied to the electric school bus charger as well as any other Level 2 or 3 chargers. Richard did not feel this was a difficult process and had recent experience.

AGENDA ITEM 7

NET METERING TARIFF (DOCKET 5192) UPDATE